CONTROLLED COPY FOR PRODUCTION	
Received by	
Signature	
Date	
Company	

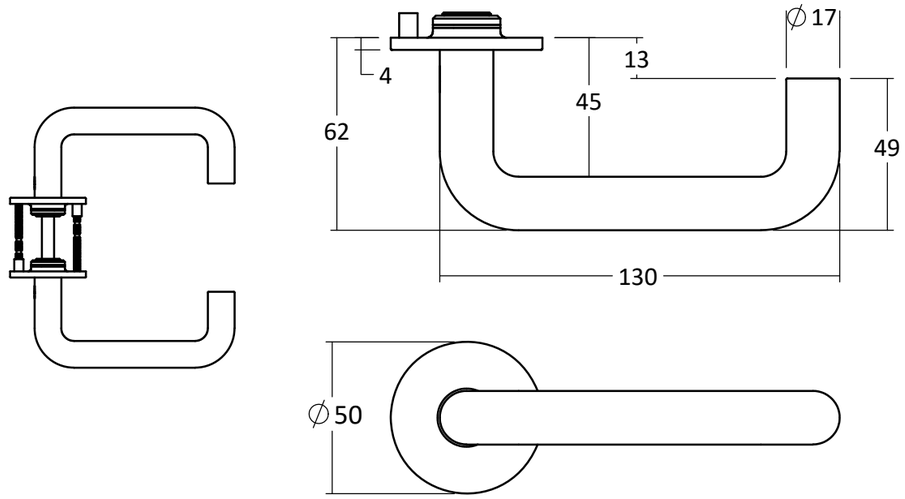

ORIGINALLY A3

@llgood
Allgood plc
B19 3NT

© Confidential

DESIGN AMENDMENT	D/A No.	ISSUE	DATE	CHECKED
AS DRAWN		01	07.10.24	

ENGINEERING © Allgood

DRAWN BSC DATE 07.10.24
CHECKED DATE

GEN. TOL.
LINEAR... +/- 0.25
ANGULAR

ALL DIMS. IN MM
SCALE NTS

TITLE LEVER SET - MODRIC RTD ∅17
LINE DRG FOR DATA SHEET

MATERIAL XX
FINISH XX

DRG No.
LD3507